EDD

NOTES:
1. UNLESS OTHERWISE SPECIFIED, TOLERANCE ARE ± .010" (.254mm).

CAD#12-5051_2

DRAWING NO.:	REV.
12-5051-*	N/C

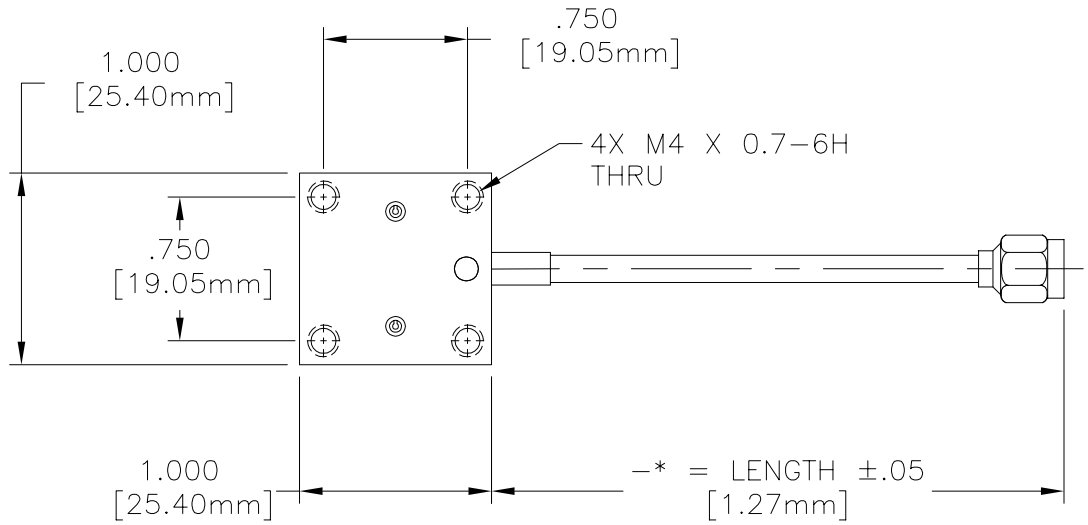

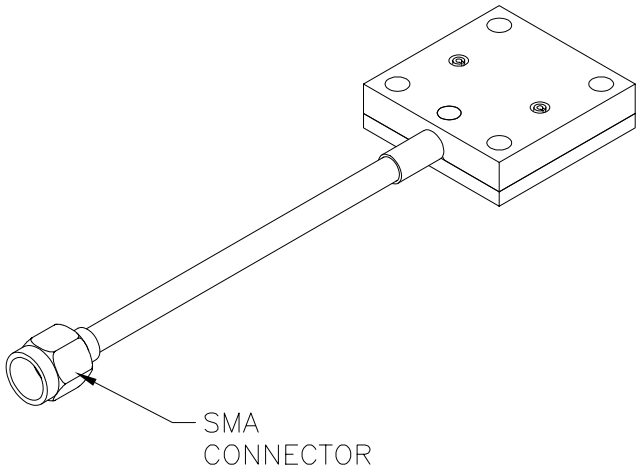

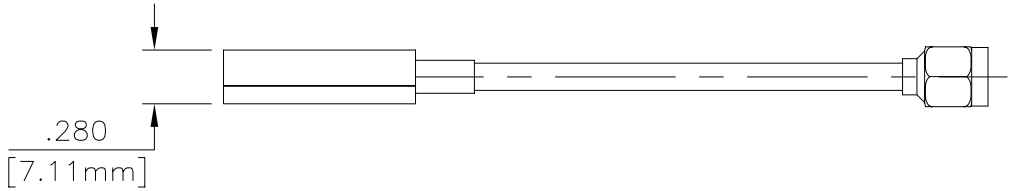

TECHNICAL:
RESISTANCE: 50.0 OHMS ± 5%
FREQUENCY: DC-2.0 GHz
VSWR (MAX): 1.08:1
POWER (MAX): 250 WATT @ 100°C
MAX HEAT SINK TEMP

REV.	DESCRIPTION	DRAWN	APVD.

ECN#: 00413 | APVD | DATE

UNLESS OTHERWISE SPECIFIED
1. DO NOT SCALE DRAWING
2. DIMENSIONS ARE IN INCHES
3. DIMENSIONS ARE AFTER PLATING
4. CORNERS, EDGES AND FILLETS: R MAX
5. SURFACE ROUGHNESS:
6. REMOVE ALL BURRS

TOLERANCES
.X ±
.XX ±
.XXX ±
ANGLES X° ±

THE INFORMATION CONTAINED HEREIN IS PROPRIETARY TO FLORIDA RF LABS, INC. AND IS TO BE USED SOLELY FOR THE PURPOSE WHICH IT IS SUPPLIED. IT SHALL NOT BE DISCLOSED IN WHOLE OR IN PART, TO ANY OTHER PARTY, WITHOUT THE EXPRESS PERMISSION IN WRITING BY FLORIDA RF LABS, INC.

REFERENCE: –

MATERIAL: –

FINISH: –

FLORIDA RF Labs INC.
P.O. BOX 899
STUART, FL. 34995

TITLE: TERMINATION, COAXIAL REMOTE, 250 WATT

SCALE	CAGE CODE ID NO.	SIZE
1/1	2Y194	A

DRAWING NO.:	REV.
12-5051-*	N/C

APVD.: | CHKD.: | DRAWN: BLP 06/08/01 | SHEET OF