EDD

NOTES:
UNLESS OTHERWISE SPECIFIED, TOLERANCES ARE ± .010" [.254mm].

CAD#33-1005J

DRAWING NO.:	REV.
33-1005-*	J

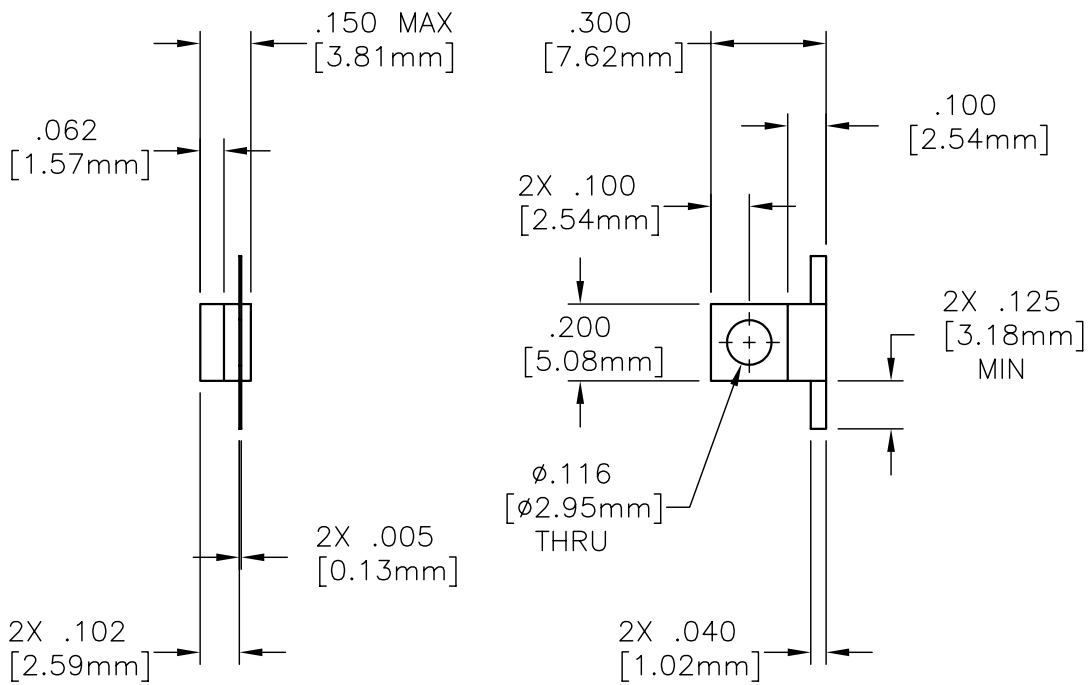

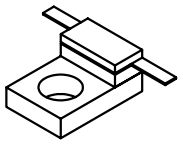

MATERIALS:
- MTG. FLANGE: OFHC (1/4 HD)
- SUBSTRATE: BERYLLIUM OXIDE
- COVER: ALUMINA
- TAB: BERYLLIUM COPPER PER ASTM B194
- RESISTIVE FILM: NICHROME

FINISH:
- MTG. FLANGE: NICKEL OVER COPPER
- TAB: TIN/LEAD PER MIL-T-10727

TECHNICAL:
- NOMINAL IMPEDANCE (OHMS): 50
- FREQUENCY RANGE (GHz): DC-4.0
- TEMPERATURE COEFFICIENT: ± 200 PPM/°C MAX
- OPERATING TEMP. (°C): -55° TO +150°
- VSWR (MAX): 1.15:1 DC-2.0 GHz
  1.35:1 2.0-4.0 GHz
- INPUT POWER (WATTS): 10
- ATTENUATION STABILITY: .0001 dB/dB/°C
- *ATTENUATION ACCURACY: 1-10 dB ± 0.5 dB
  11-20 dB ± 1.0 dB

REV.	DESCRIPTION	DRAWN	APVD.
J	ECN#01279	BLP 02/20/02	OA 03/28/02

ECN# N/A | APVD – | DATE –

UNLESS OTHERWISE SPECIFIED
1. DO NOT SCALE DRAWING
2. DIMENSIONS ARE IN INCHES
3. DIMENSIONS ARE AFTER PLATING
4. CORNERS, EDGES AND FILLETS: R MAX
5. SURFACE ROUGHNESS:
6. REMOVE ALL BURRS

TOLERANCES
.X ±
.XX ±
.XXX ±
ANGLES X° ±

THE INFORMATION CONTAINED HEREIN IS: (A) CONSIDERED PROPRIETARY TO FLORIDA RF LABS INC.; (B) PROTECTED BY COPYRIGHT OWNED BY FLORIDA RF LABS INC.; (C) CONSIDERED A "WORK FOR HIRE" UNDER COPYRIGHT LAW; (D) PROTECTED BY TRADE SECRET LAWS WHICH MAKE ILLEGAL THE MISAPPROPRIATION OF THIS INFORMATION; AND (E) IS TO BE USED SOLELY FOR THE PURPOSE WHICH IT IS SUPPLIED. THIS INFORMATION SHALL NOT BE DISCLOSED IN WHOLE OR IN PART, TO ANY PARTY, FOR ANY REASON WITHOUT THE EXPRESS WRITTEN CONSENT OF A QUALIFIED EXECUTIVE OF FLORIDA RF LABS INC.

REFERENCE: CATALOG

MATERIAL: –

FINISH: –

FLORIDA RF Labs INC.
8851 OLD KANSAS AVE.
STUART, FL. 34997
772-286-9300

TITLE: ATTENUATOR, FLANGE MOUNT, 10 WATT

SCALE	CAGE CODE ID NO.	SIZE	DRAWING NO.:	REV.
2/1	2Y194	A	33-1005-*	J

MFG:	CHKD.:	DRAWN:	SHEET OF
MJK 03/12/02	DR 03/07/02	BLP 02/20/02	